DELTA SYSTEMS



7" TFT OEM CONFIGURABLE TOUCHSCREEN DISPLAY

Model Series 2152

- Provides an intuitive and interactive user experience
- Consolidates multiple gauges/meters into a single device
- OEMs configure their own interface and screens
- 1000 Nits display is readable in direct sunlight
- Capacitive touchscreen works with most gloves
- Sealed to IP67 per IEC 60529
- RoHS, REACH, and Conflict Mineral compliant

OPERATION

Provides an operator-focused dashboard that keeps them in command with the efficiency, technology and sophistication expected of today's modern equipment. See fuel and/or battery level, machine status, diagnostic codes and more in one convenient place. Optically-bonded, 18-bit color display has 800x480 resolution and is readable in direct sunlight. Sealed to IP67 with an integral sealed connector, it is ideal for off-highway vehicles; outdoor power, agricultural, construction, and material handling equipment; and more. OEMs configure their own user experience and screens using the embedded Linux OS and open-source development tools like Qt Quick and Ensemble Graphics Toolkit. Designed and assembled in the USA.

ELECTRICAL SPECIFICATIONS

Operating Voltage, VDC	9-90
Max Operating Current, A	2
MPU	600 MHz ARM9
Memory	512MB SLC, 128MB SDRAM, 64Mb QSPI Flash
Reverse Polarity Protected	Yes
Short Circuit Protected	Yes
Design Life, hours	2000
EMC	EN61000-6-3, FCC Part 15, Subpart B, Class B
Internal 120Ω CAN Termination	Optional

ENVIRONMENTAL RATINGS

Ingress Protection	IEC 60529 IP67
Operating Temperature Range	-20 to +70 °C
Storage Temperature Range	-30 to +80 °C
Chemical Resistance	Insect Killer, Weed Killer, Liquid Fertilizer, Mole Repellant, Battery Acid
Environmental Testing	ISO 15003:2019 compliant

DELTA SYSTEMS

(330) 626-2811 | 1734 FROST ROAD, STREETSBORO, OH 44241 | WWW.DELTASYSTEMSINC.COM

Version 1.2
11/6/26

© 2026 DELTA SYSTEMS

7” TFT OEM CONFIGURABLE TOUCHSCREEN DISPLAY

Model Series 2152

CONNECTOR PIN-OUT

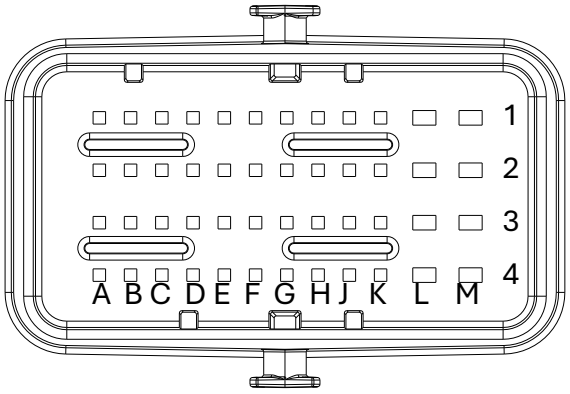

HARNESS SIDE MATING CONNECTOR
Molex P/N 64320-1311

Pin	Signal Name	Signal Type	Typ/Max Input Current
A1	ActiveH_Input1	Digital Input (Active High)	< 3mA
A2	CAM+	Analog Camera Input	
A3	Reserved	-	
A4	CAN H	CAN bus I/O	
B1	ActiveH_Input2	Digital Input (Active High)	< 3mA
B2	CAM-	Analog Camera Input	
B3	Reserved	-	
B4	CAN L	CAN bus I/O	
C1	ActiveH_Input3	Digital Input (Active High)	< 3mA
C2	Reserved	-	
C3	Reserved	-	
C4	Reserved	-	
D1	ActiveH_Input4	Digital Input (Active High)	< 3mA
D2	CAMERA PWR	Power Output 12V	100mA Max
D3	ActiveL_Input5	Digital Input (Active Low)	< 3mA
D4	D-GND	Digital Ground	
E1	9_90_HSD_Output	High-Side Driver Output	<= 375 mA
E2	D-GND	Digital Ground	
E3	ActiveL_Input4	Digital Input (Active Low)	< 3mA
E4	Reserved	-	
F1	HSDA_P USB	High-Speed Data	
F2	Reserved	-	
F3	ActiveL_Input3	Digital Input (Active Low)	< 3mA
F4	LSD1_OUT	Low-Side Driver Output	<= 850 mA

Pin	Signal Name	Signal Type	Typ/Max Input Current
G1	HSDA_N USB	High-Speed Data	
G2	Reserved	-	
G3	ActiveL_Input2	Digital Input (Active Low)	< 3mA
G4	LSD2_OUT	Low-Side Driver Output	<= 850 mA
H1	Ground	Ground	
H2	ActiveH_WakeUp	Wake Control Input	< 3mA
H3	ActiveL_Input1	Digital Input (Active Low)	< 3mA
H4	LSD3_OUT	Low-Side Driver Output	<= 850 mA
J1	USB_OTG_ID	USB ID Input	
J2	ActiveL_WakeUp	Wake Control Input	< 3mA
J3	Reserved	-	
J4	LSD4_OUT	Low-Side Driver Output	<= 850 mA
K1	Ext_USB5V	USB Power	200 mA
K2	ActiveH_WakeUp_IGN_In	Ignition Wake Input	< 3mA
K3	Reserved	-	
K4	12V HSD4_OUT	High-Side Driver Output	220 mA
L1	+9_90VBAT	Main Battery Power Input	2.0A Typical @12V
L2	+9_90VBAT	Main Battery Power Input	
L3	12V_UNPROTECTED	Main 12V Power Input	2.0A Max
L4	12V_UNPROTECTED	Main 12V Power Input	
M1	GND	Power Ground	
M2	GND	Power Ground	
M3	12V_GND	Power Ground	
M4	12V_UNPROTECTED	Power Input	

DELTA SYSTEMS

(330) 626-2811 | 1734 FROST ROAD, STREETSBORO, OH 44241 | WWW.DELTASYSTEMSINC.COM

Version 1.2
11/6/26

© 2026 DELTA SYSTEMS

7” TFT OEM CONFIGURABLE TOUCHSCREEN DISPLAY

Model Series 2152

DIMENSIONS

Note: For specific part information, please refer to the application print. Included mounting retainer not shown.

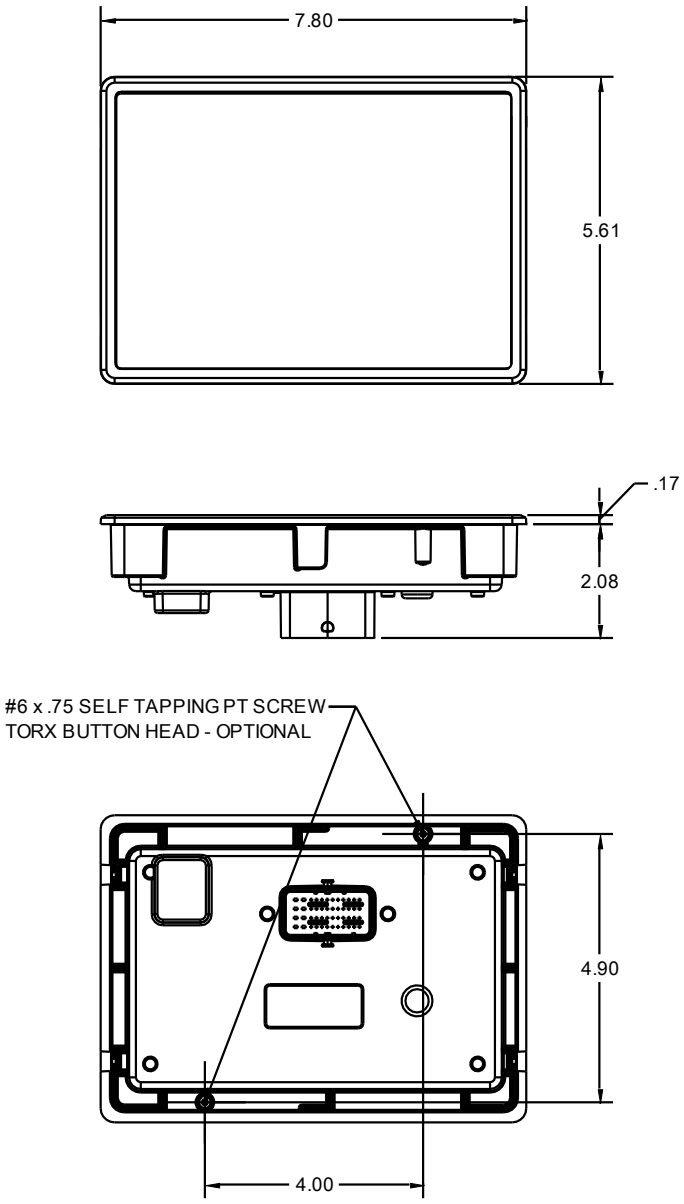

DELTA SYSTEMS

(330) 626-2811 | 1734 FROST ROAD, STREETSBORO, OH 44241 | WWW.DELTASYSTEMSINC.COM

© 2026 DELTA SYSTEMS

Version 1.2
11/6/26

7” TFT OEM CONFIGURABLE TOUCHSCREEN DISPLAY

Model Series 2152

MOUNTING CONFIGURATION

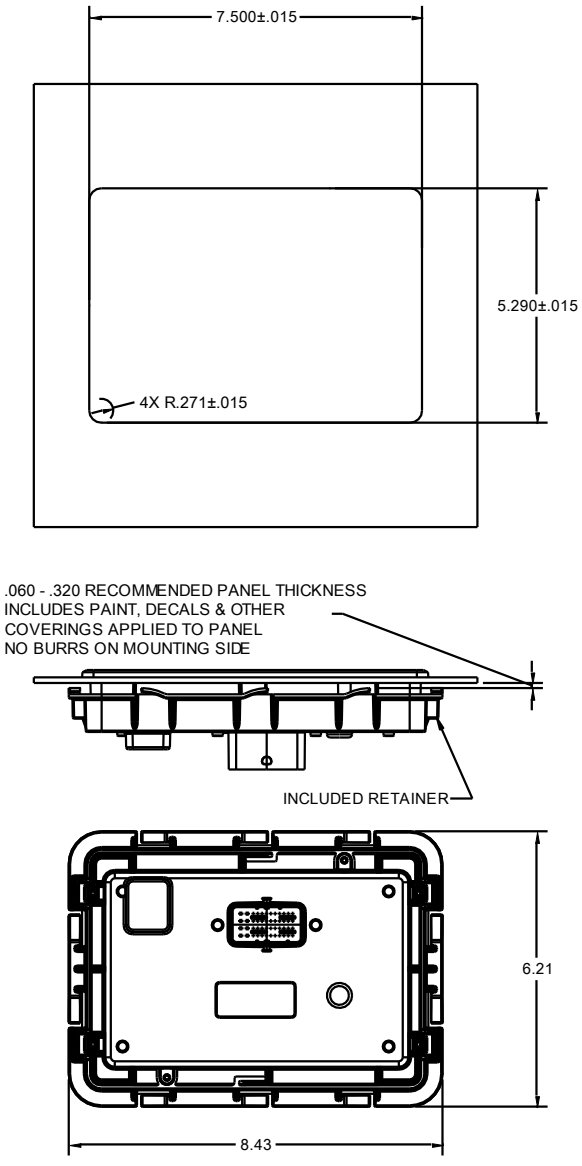

Note: Life expectancy and performance are largely dependent on application. It is the user’s responsibility to determine the suitability of this product for the application. This information is intended as a guide for proper application.

DELTA SYSTEMS

(330) 626-2811 | 1734 FROST ROAD, STREETSBORO, OH 44241 | WWW.DELTASYSTEMSINC.COM

© 2026 DELTA SYSTEMS

Version 1.2
11/6/26