REVISIONS			
H	ELIMINATED SHEARING, CR 826	07/31/96	TW
J	REV. NOTES & TITLE BLOCK, CR 992	07/17/97	TW
K	REVISED TAB & CONCTR P/N, CR1627	02/24/06	MA
L	UPDATE MATERIAL CR1908	07/21/10	ERB
M	ADDED BLOCK TOLERANCE, CN3513	01/30/13	IDK

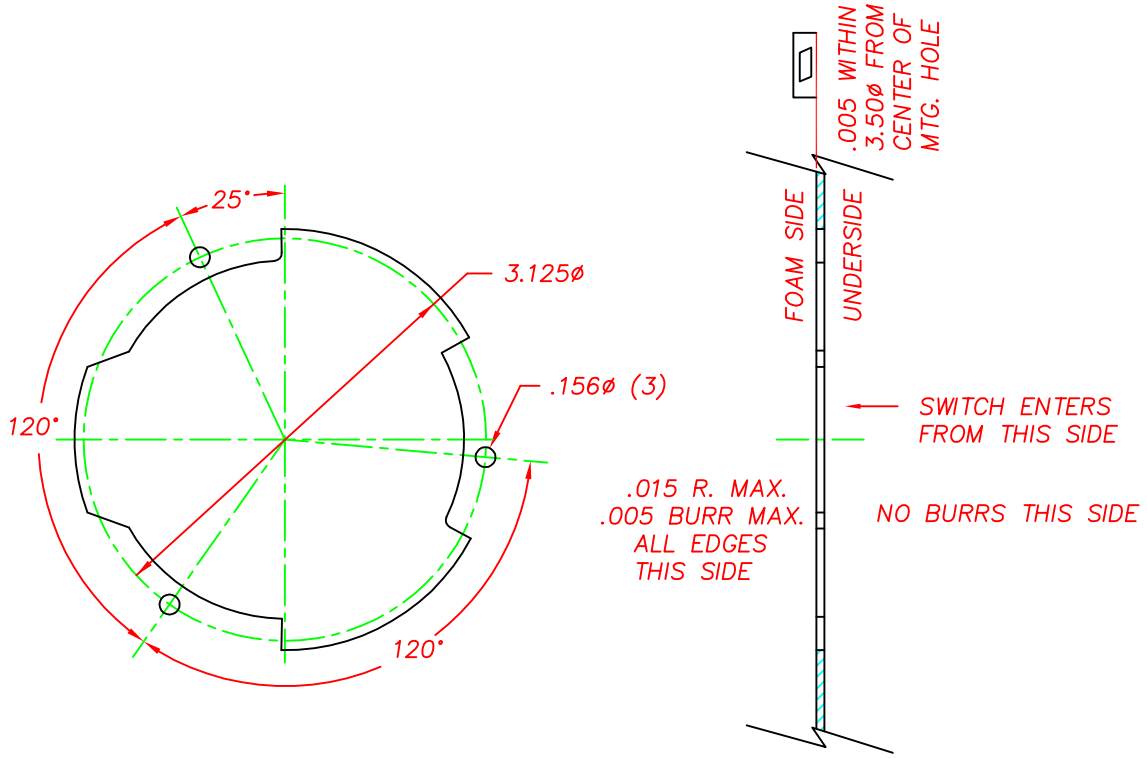

RECOMMENDED MOUNTING HOLE
(FOR REFERENCE ONLY)

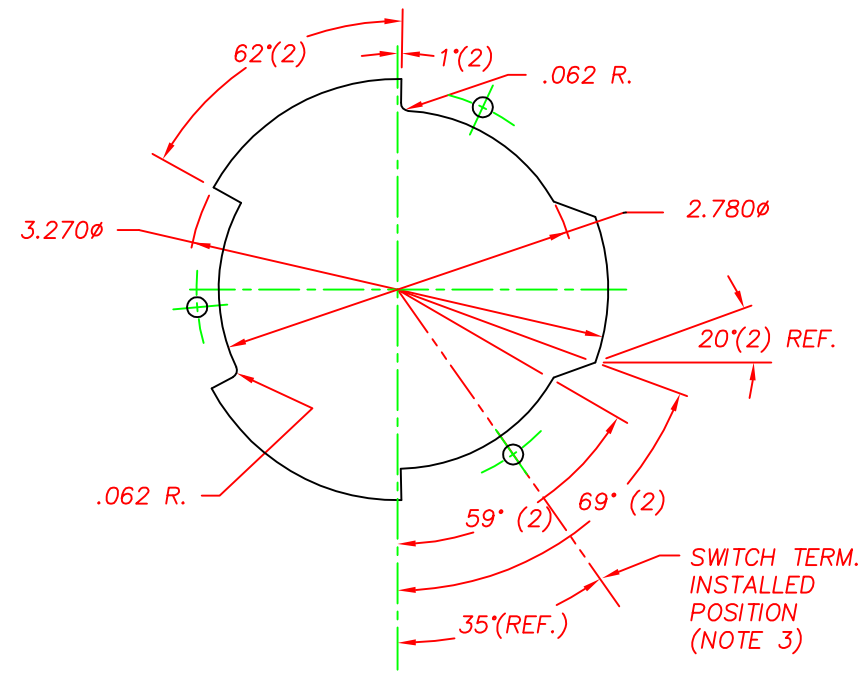

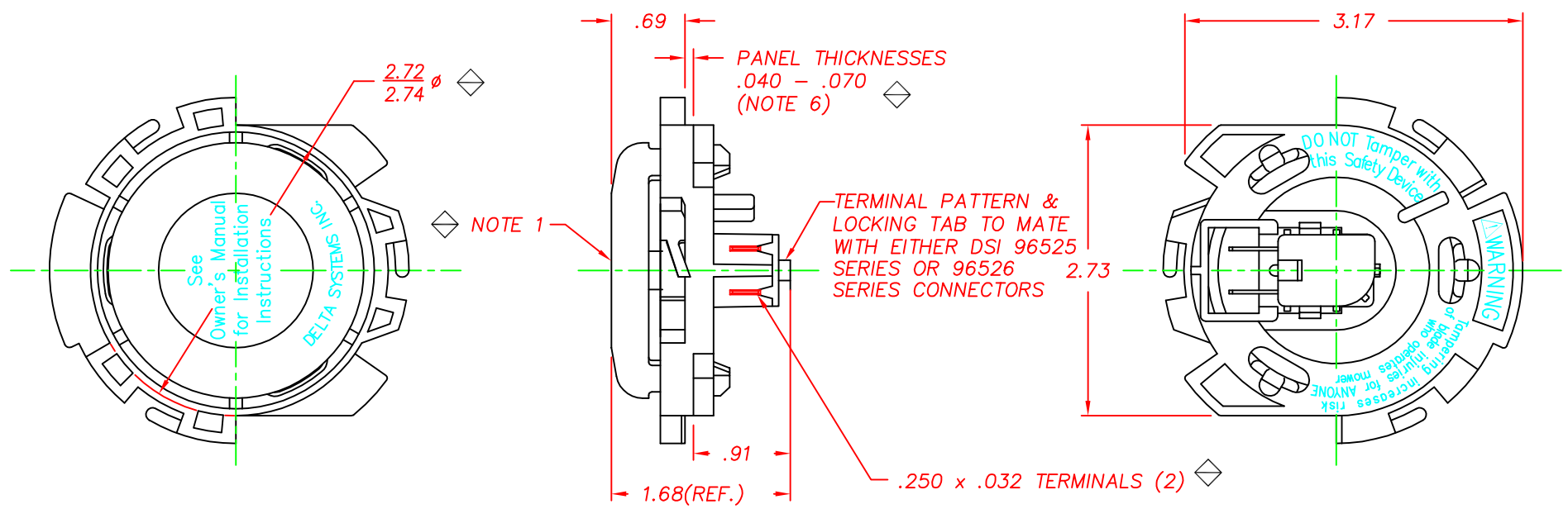

NOTES:

1–.040–.150 MOTION TO MAKE OR BREAK CONTACTS.
2–PLASTIC PARTS – POLYPROPYLENE.
TERMINALS – NICKEL PLATED BRASS.
3–SWITCH REQUIRES 55° CLOCKWISE ROTATION TO LOCK IN PLACE (VIEWED FROM UNDERSIDE OF SEAT PAN).
4–4 ± 1.0 LBS. ACTUATION FORCE AT .30" DEPRESSION OF ACTUATOR CAP.
5–PROPERLY INSTALLED SWITCH FRAME WILL SUPPORT A STATIC LOAD OF 350 LBS. AT 60°F.
6–THICKNESS INCLUDES PAINT AND/OR ANY OTHER LAYERS APPLIED BETWEEN SWITCH AND PANEL.
7–DATE CODE INDICATING YEAR, MONTH, AND DAY OF MONTH MANUFACTURED STAMPED ON HOUSING.
8–INTEGRITY OF WELD & SWITCH FUNCTIONALITY TESTED AFTER ASSEMBLY.
9–SWITCH IS BLACK. ACTUATOR CAP & FRAME ARE GRAY.
10–DELTA IS RESPONSIBLE FOR COMPLIANCE TO THIS SPECIFICATION. THE FUNCTION AND ADEQUACY OF THE SAFETY "SYSTEM" IN WHICH THIS COMPONENT IS USED IS THE RESPONSIBILITY OF THOSE THAT DESIGN AND BUILD THE SYSTEM (INCLUDING BUT NOT LIMITED TO THE SEAT DESIGN, SWITCH LOCATION, FOAM DENSITY AND DESIGN).
11–THIS PRODUCT COVERED BY THE FOLLOWING U.S. PATENT; 5,424,502.

DELTA SYSTEMS, INC. DOES NOT ASSUME ANY LIABILITY ARISING OUT OF THE MISAPPLICATION OF ANY PRODUCT

COMPUTER GENERATED DRAWING – NO MANUAL CHANGES ALLOWED

UNLESS OTHERWISE SPECIFIED DIMENSIONS ARE IN INCHES TOLERANCES ARE: .XX± .02 .XXX± .005 ANG± 1

DO NOT SCALE DRAWING

DRAWN	DATE
AJC	06/22/93
CHECKED TW	DATE 06/23/93
MATERIAL SEE NOTE 2	
FINISH SEE NOTE 9	

DELTA SYSTEMS INC.
STREETSBORO, OHIO 44241

TITLE: N.O. TWIST LOCK MOUNT SEAT SWITCH

SIZE: C | DWG. NO. 6500–02

SCALE: FULL | PROJECT NO. EX311 | REV M