DWG. NO.	SH	REV.

COMPUTER GENERATED DRAWING – NO MANUAL CHANGES

REVISIONS

~	INITIAL RELEASE PER CR 1469	12/09/02	JH
A	NOTE 7, .300 WAS .030, CN 0863	09/14/04	JH
B	CHANGE SPECIFICATIONS; CN 0932	12/17/04	JM

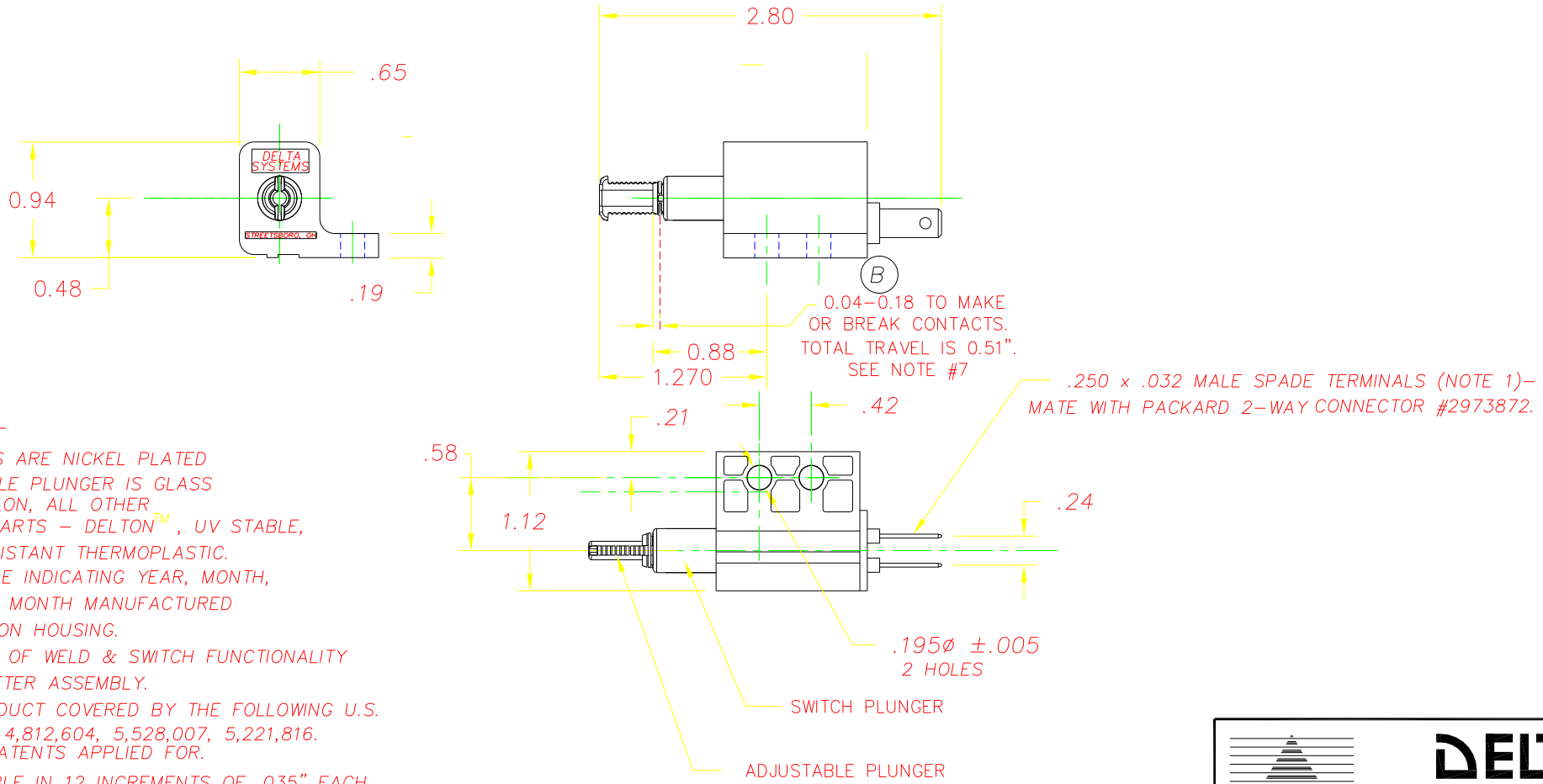

NOTES:

1–TERMINALS ARE NICKEL PLATED

2–ADJUSTABLE PLUNGER IS GLASS FILLED NYLON, ALL OTHER PLASTIC PARTS – DELTON™, UV STABLE, FUEL RESISTANT THERMOPLASTIC.

3–DATE CODE INDICATING YEAR, MONTH, & DAY OF MONTH MANUFACTURED STAMPED ON HOUSING.

4–INTEGRITY OF WELD & SWITCH FUNCTIONALITY TESTED AFTER ASSEMBLY.

5–THIS PRODUCT COVERED BY THE FOLLOWING U.S. PATENT; 4,812,604, 5,528,007, 5,221,816. OTHER PATENTS APPLIED FOR.

6–ADJUSTABLE IN 12 INCREMENTS OF .035" EACH. THE FORCE REQUIRED TO DEPRESS THE "ADJUSTABLE PLUNGER" WHEN THE "SWITCH PLUNGER IS AT THE BOTTOM OF IT'S TRAVEL IS 5–15 LBS., REPEATABLE FOR THREE ADJUSTMENT CYCLES. (B)

7–3.0±1.0 LBS. FORCE TO ACTUATE THE SWITCH PLUNGER .300".

8–ELECTRICAL LIFE:
75,000 CYCLES @ 3A 12VDC RESISTIVE LOAD.
10,000 CYCLES @ 3A 12VDC INDUCTIVE LOAD.

DELTA SYSTEMS, INC. DOES NOT ASSUME ANY LIABILITY ARISING OUT OF THE MISAPPLICATION OF ANY PRODUCT

UNLESS OTHERWISE SPECIFIED DIMENSIONS ARE IN INCHES
TOLERANCES ARE:
.XX± .020 .XXX± .010 ANG± 1°

DO NOT SCALE DRAWING

DRAWN JLM	DATE 03/20/02
CHECKED JH	DATE 04/06/02
MATERIAL NOTE 2	
FINISH BLACK / GRAY	

DELTA SYSTEMS INC.
STREETSBORO, OHIO 44241

TITLE: N.O. PLUNGER SWITCH WITH ADJUSTMENT

SIZE	DWG. NO.	PROJECT NO.	REV
B	6400–52AP	EX311	B

SCALE	SHEET	OF
FULL	1	1